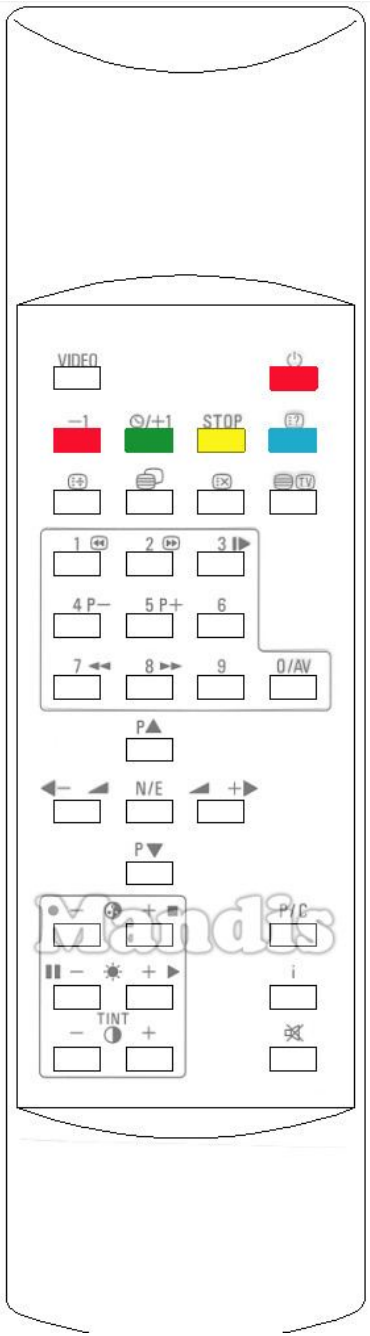

Original		Rechange	
	Power		Power
–1	Red	NETFLIX SEARCH	Red / Netflix / Search
⏲/+1	Green	APP REPEAT	Green / APP / Repeat
STOP	Yellow	YouTube REPEAT A-B	Yellow / YouTube / Repeat
	Blue	Prime Video RANDOM	Blue / Prime Video / Random
	[=+]	OPT-TOOLS SETUP	Setup / OPT /
	[/=]	RDS AV INPUT	AV / Input / RDS
	[=x]	FORMAT PICTURE	Picture / Format
	[=]	GOTO TEXT	Text / Goto
1	1	TV 1	1
2	2	DVD 2	2
3	3	CD - STB 3	3
4 P–	4	VIDEO 4	4
5 P+	5	TAPE 5	5
6	6	TUNER 6	6
7	7	AUX - HDD 7	7
8	8	USB 8	8

Original		Rechange	
9	9	BLUETOOTH 9	9
0/AV	0/AV	HDMI - SAT 0	0
P▲	P+	+ CH PAGE	CH+ / Page+
P▼	P-	CH PAGE –	CH- / Page-
◄ +►	Vol+	+ VOL	Vol+
◄– ◄	Vol-	VOL –	Vol-
N/E	N/E	OK	OK
◄ +►	Right	►	Right
◄– ◄	Left	◄	Left
P▲	Up	▲	Up
P▼	Down	▼	Down
P/C	P/C	RETURN BACK	Back / Return
i	i	ANGLE INFO	Info / Angle
	Mute	DIMMER MUTE	Mute / Dimmer
	Color-	TUNE- ◄◄	<< / Tune-
	Color+	TUNE+ ►►	>> / Tune+
	Brightness-	PRESET- ⏮	I<< / Preset-

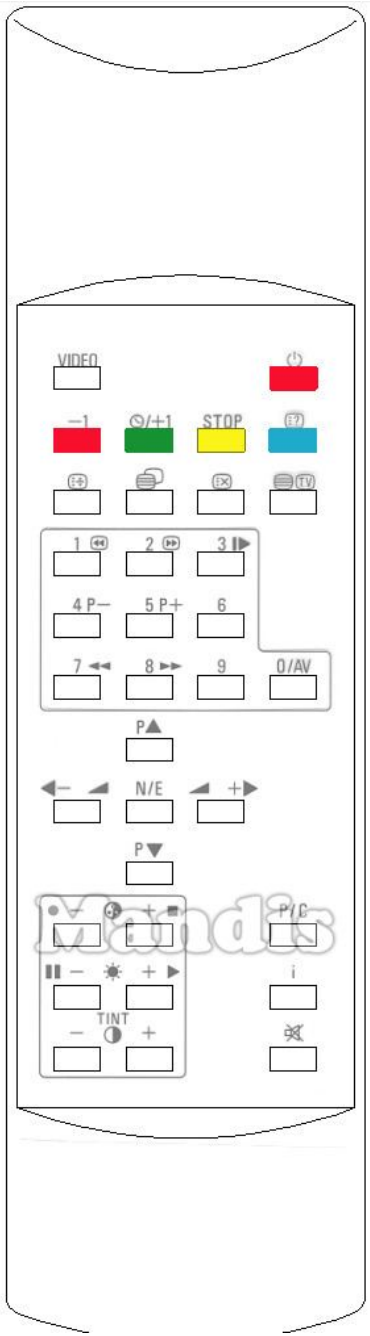

Original	Rechange	Original	Rechange
Brightness+	>>I / Preset+		
Tint-	Display / Media		
Tint+	Smart / List		

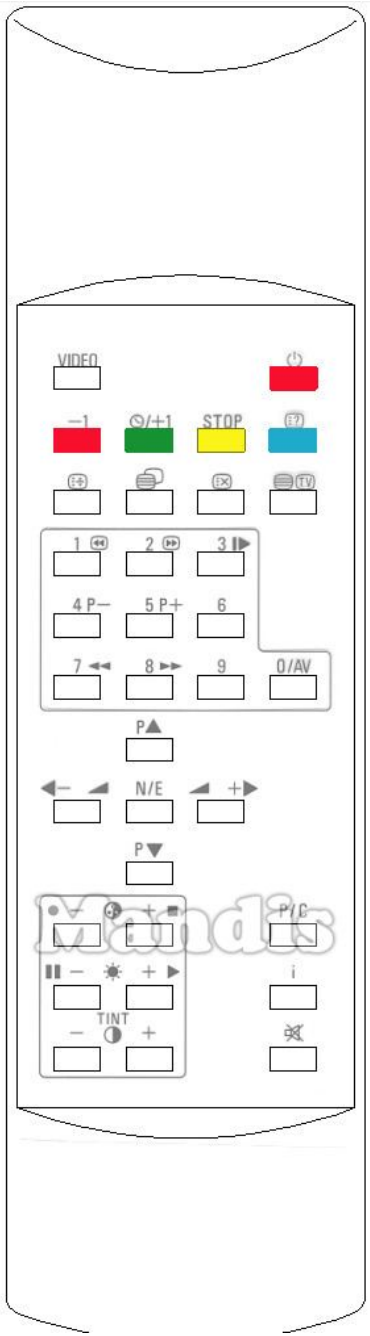

Original		Rechange	
	Power		Power
	Red	NETFLIX SEARCH	Red / Netflix / Search
	Green	APP REPEAT	Green / APP / Repeat
STOP	Yellow	YouTube REPEAT A-B	Yellow / YouTube / Repeat
	Blue	Prime Video RANDOM	Blue / Prime Video / Random
0/AV	0/AV	HDMI - SAT 0	0
	Vol+	+ VOL	Vol+
	Vol-	VOL −	Vol-
P▲	P+	+ CH PAGE	CH+ / Page+
P▼	P-	CH PAGE −	CH- / Page-
P▼	Down		Down
P▲	Up		Up
N/E	N/E	OK	OK
	Right		Right
	Left		Left
i	i	ANGLE INFO	Info / Angle
	Mute	DIMMER MUTE	Mute / Dimmer

Original		Rechange	
	Rec	REC MODE	Rec / Rec Mode
	Stop	HOLD	Stop / Hold
	Pause	STEP - FREEZE	Pause / Step / Freeze
	Play	SLOW	Play / Slow
TINT	Tint-	MEDIA DISPLAY	Display / Media
TINT	Tint+	LIST SMART	Smart / List
1	<<	TUNE-	<< / Tune-
2	>>	TUNE+	>> / Tune+
3	I>	SIZE ZOOM	Zoom / Size
7	I<<	PRESET-	I<< / Preset-
8	>>I	PRESET+	>>I / Preset+